CITY OF HOLLY HILL

RESIDENTIAL WOOD FRAMED SHED

SHEET	DESCRIPTION
1	COVER SHEET
2	SHED ELEVATIONS & NOTES
3	SHED FOUNDATION – SLAB ON GRADE
4	SHED FOUNDATION – ANCHORED WOOD FLOOR
5	DOOR & WINDOW FRAMING & CONNECTOR DETAILS
6	WALL & ROOF FRAMING PLAN & NAILING PLAN

THESE PLANS WERE PREPARED FOR HOME OWNERS WHO WISH TO BUILD THEIR OWN WOOD FRAMED SHED. THESE PLANS CONTAIN TYPICAL DETAILS WITH A MAXIMUM LENGTH OR WIDTH OF 12 FEET AND A MAXIMUM HEIGHT OF 10 FEET MEASURING AN AREA OF NO MORE THAN 120 SQUARE FEET. THE PLAN INCLUDES OPTIONS FOR EITHER A SLAB–ON–GRADE FOUNDATION OR AN ANCHORED WOOD FLOOR, AS WELL AS OPTIONS OF PLACING DOOR(S) AND WINDOW(S) IN THE WALLS. YOU MAY ALSO CHOOSE THE FINISH MATERIAL TO BE APPLIED OVER THE EXTERIOR STRUCTURAL SHEATHING.

THESE PLANS ARE IN COMPLIANCE WITH THE WIND LOAD PROVISIONS FOR 120 MPH OF THE PRESCRIPTIVE DESIGN OF THE WOOD FRAME CONSTRUCTION MANUAL (WFMC) 2001 EDITION.

DISCLAIMER

THE CITY OF HOLLY HILL SHALL NOT BE RESPONSIBLE FOR THE USE, OR MISUSE, OF THESE DRAWINGS. EVERY EFFORT HAS BEEN MADE IN THE PREPARATION OF THESE PLANS TO OFFER THE MOST CURRENT, CORRECT, AND CLEARLY EXPRESSED INFORMATION POSSIBLE. THESE DRAWINGS SHALL NOT BE ALTERED IN ANY WAY AND THE SHED SHALL BE NO LARGER THAN 10'x12' (120 SQ FEET) AND 10' HIGH MAX.

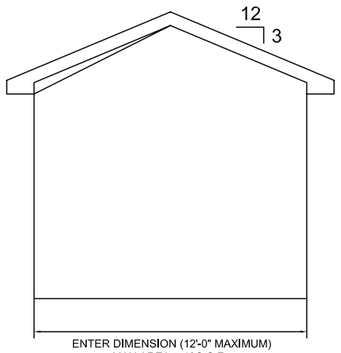

ENTER ELEVATION TYPE: FRONT, RIGHT, REAR OR LEFT

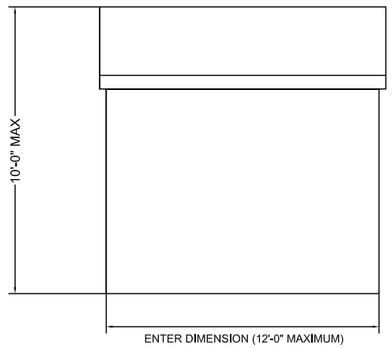

ENTER ELEVATION TYPE: FRONT, RIGHT, REAR OR LEFT

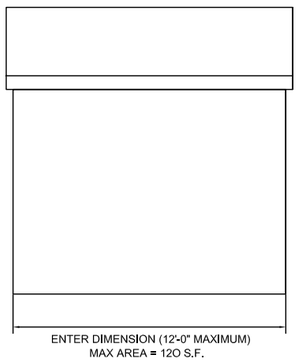

ENTER ELEVATION TYPE: FRONT, RIGHT, REAR OR LEFT

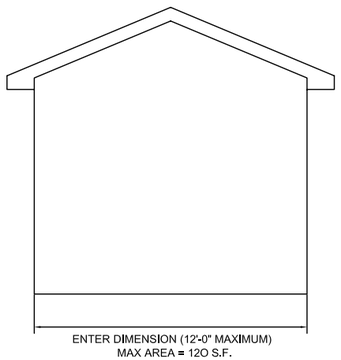

ENTER ELEVATION TYPE: FRONT, RIGHT, REAR OR LEFT

SHED ELEVATIONS

INSTRUCTIONS:

1: IDENTIFY ELEVATION TYPE FOR EACH ELEVATION (FRONT, RIGHT, REAR AND LEFT)
2: SKETCH WINDOW AND DOOR OPENINGS ON EACH ELEVATIONS. DENOTE SIZE OF EACH.
3: IDENTIFY WALL COVERING MATERIAL(S) TO BE USED (vinyl siding, hardiboard, stucco, etc.) _____
4: IDENTIFY ROOF MATERIAL COVERING TO BE USED (asphalt shingles, metal panels)_____
5: IDENTIFY COLORS OF WALL MATERIAL, TRIM, DOORS, WINDOWS AND ROOF ON COLOR AND MATERIAL SHEET.

1. PRESCRIPTIVE DESIGN PARAMETERS ARE ACCORDING TO THE WOOD FRAME CONSTRUCTION MANUAL 2001 EDITION UNDER THE PROVISIONS OF SECTION 1609.1.1, PARAGRAPH 4 OF THE FLORIDA BUILDING CODE.
2. WALL SHEATHING SHALL BE EXTERIOR GRADE WOOD STRUCTURAL PANEL WITH A MINIMUM THICKNESS OF 1/2 INCH IF INSTALLED HORIZONTALLY WITH LONG DIMENSION ON VERTICAL STUDS OR A MINIMUM THICKNESS OF 19/32 INCH IF INSTALLED VERTICALLY ON STUDS.
3. EXTERIOR WALL VAPOR BARRIER, SIDING, OR FINISH IS OPTIONAL.
4. WALL STUD SPACING SHALL NOT EXCEED 24" ON CENTER.
5. WINDOW OPENINGS ARE OPTIONAL, LOCATIONS ARE TO BE AT THE CENTER OF WALL. WIDTH OF THE WINDOW OPENING SHALL NOT EXCEED 4 FT.
6. HEADER LUMBER FOR WINDOW AND DOOR OPENINGS UP TO 4 FT WIDE SHALL BE MADE OF 2-2"x4".
7. JACK STUDS TO SUPPORT HEADERS ON WINDOW AND DOOR OPENINGS UP TO 4 FT WIDE SHALL BE MADE OF 1-2"x4" AT EACH END OF THE HEADER.
8. ROOF RAFTER SPACING SHALL NOT EXCEED 16" ON CENTER
9. ONE OF THE FOLLOWING SHALL BE CONSTRUCTED: A ROOF RIDGE BEAM CONSISTING OF 2-2"x8" NAILED TOGETHER WITH 2-16d COMMON NAILS EVERY 12" ATTACHED TO RAFTERS USING H3 SIMPSON CONNECTORS OR A COLLAR TIE (COLLAR BEAM) OF 2"x4" LUMBER TO BE LOCATED IN THE TOP THIRD OF THE ATTIC SPACE AND ATTACHED TO RAFTERS WITH A MINIMUM OF 2-10d COMMON NAILS AT EACH END OR A CEILING JOIST OF 2"x4" LUMBER TO BE LOCATED IN THE BOTTOM THIRD OF THE ATTIC SPACE AND ATTACHED TO RAFTERS WITH A MINIMUM OF 2-10d COMMON NAILS AT EACH END.
10. ROOF SHEATHING SHALL BE A MINIMUM OF 7/16" THICK OF WOOD STRUCTURAL PANEL AND SHALL BE INSTALLED WITH THE LONG DIMENSION ACROSS THE RAFTER SUPPORTS. EDGES OF ROOF STRUCTURAL PANEL SHALL BE SUPPORTED WITH BLOCKING OR EDGE CLIPS.
11. ROOF STRUCTURAL PANEL SHALL BE ATTACHED TO SUPPORTS WITH 8d COMMON NAILS OR 10d BOX NAILS AND SPACING SHALL NOT EXCEED 6" ON CENTER.
12. ROOFING MATERIAL, WINDOWS, AND DOORS SHALL HAVE A FLORIDA PRODUCT APPROVAL AND SHALL BE INSTALLED ACCORDING TO MANUFACTURER'S SPECIFICATIONS.

THESE PLANS ARE IN COMPLIANCE WITH THE WIND LOAD PROVISIONS FOR 120 MPH OF THE PRESCRIPTIVE DESIGN OF THE WOOD FRAME CONSTRUCTION MANUAL (WFMC) 2001 EDITION.

DRAWING STATUS	
	DRAFT
	PERMIT
	BID
	ADDENDA
	CONSTRUCTION
	RECORD

NO.	DATE	REVISIONS	BY

City of Holly Hill

RESIDENTIAL WOOD FRAMED SHED

SHED ELEVATIONS & NOTES

DATE:	5/2/12	PROJECT NO.:	N/A
SCALE:	AS SHOWN	FILE NAME:	BUILDING SHED.dwg
DRAWN BY:	MC	SHEET:	2 of 6

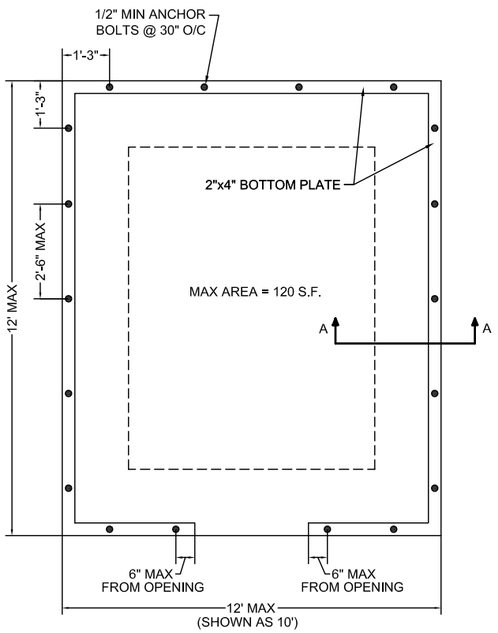

SHED FOUNDATION - SLAB ON GRADE

SCALE: 1/4" = 1'-0"

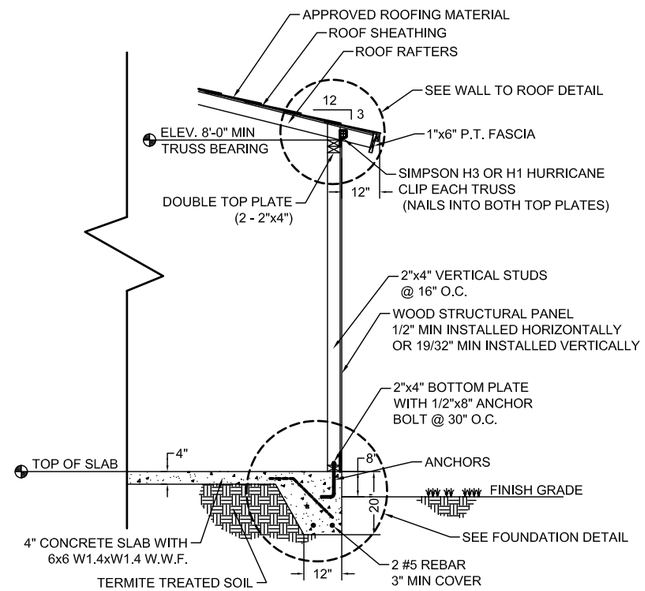

WALL SECTION - SLAB ON GRADE

SECTION A-A

SCALE: 1/4" = 1'-0"

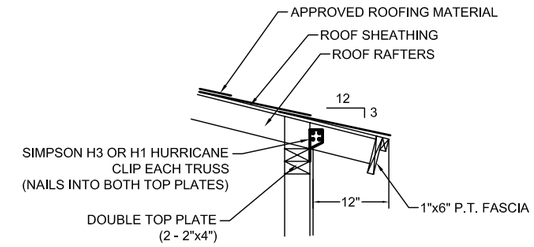

WALL TO ROOF DETAIL

SCALE: 1/2" = 1'-0"

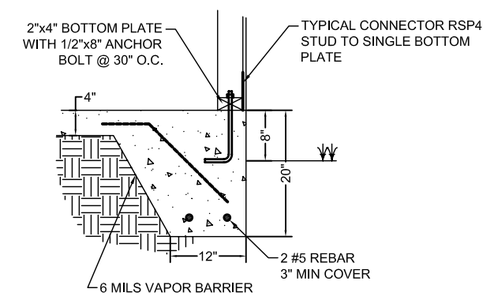

FOUNDATION DETAIL

SCALE: 1/2" = 1'-0"

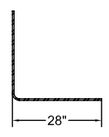

STANDARD HOOKS FOR # 5 REBAR

SCALE: 1/4" = 1'-0"

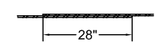

SPLICE DETAIL FOR # 5 REBAR

SCALE: 1/4" = 1'-0"

THESE PLANS ARE IN COMPLIANCE WITH THE WIND LOAD PROVISIONS FOR 120 MPH OF THE PRESCRIPTIVE DESIGN OF THE WOOD FRAME CONSTRUCTION MANUAL (WFMC) 2001 EDITION.

DRAWING STATUS	
	DRAFT
	PERMIT
	BID
	ADDENDA
	CONSTRUCTION
	RECORD

NO.	DATE	REVISIONS	BY

City of Holly Hill

RESIDENTIAL WOOD FRAMED SHED

SHED FOUNDATION SLAB ON GRADE

DATE: 5/2/12	PROJECT NO.: N/A
SCALE: AS SHOWN	FILE NAME: BUILDING SHED.dwg
DRAWN BY: MC	SHEET: 3 of 6

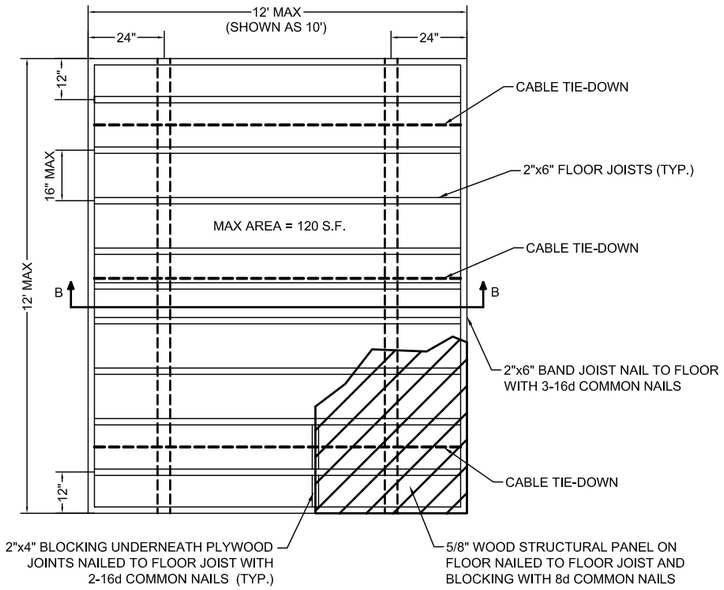

SHED FOUNDATION - WOOD FLOOR FRAMING PLAN

SCALE: 1/4" = 1'-0"

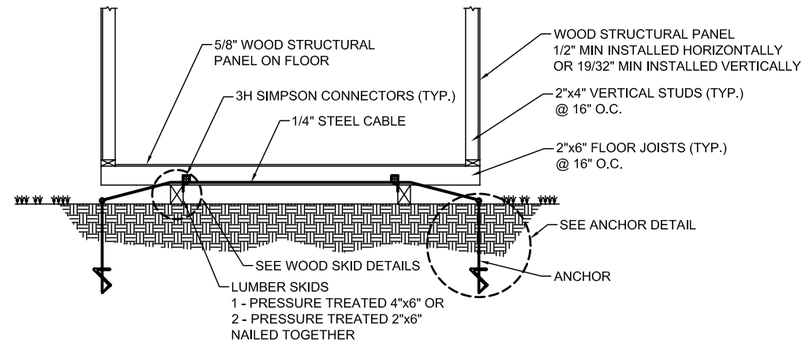

WOOD FLOOR CABLE TIE-DOWN PLAN

SECTION B-B
SCALE: 1/4" = 1'-0"

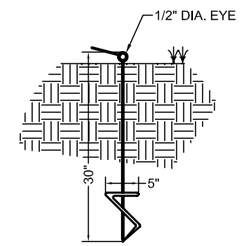

ANCHOR DETAIL

SCALE: 1/2" = 1'-0"

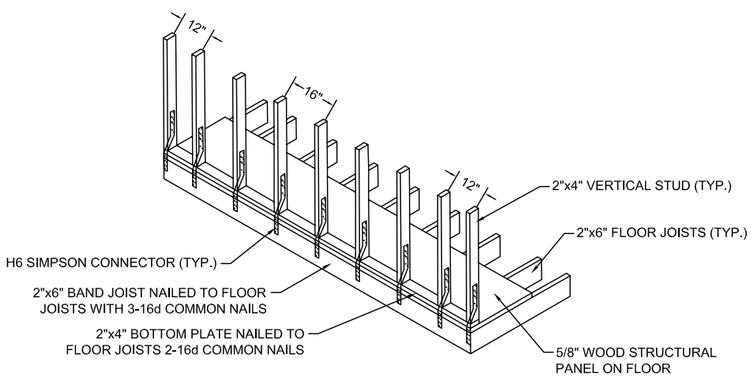

WOOD FLOOR WALL FRAMING PLAN

SCALE: 1/4" = 1'-0"

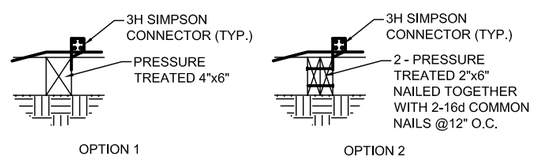

WOOD SKID DETAILS

SCALE: 1/2"1'-0"

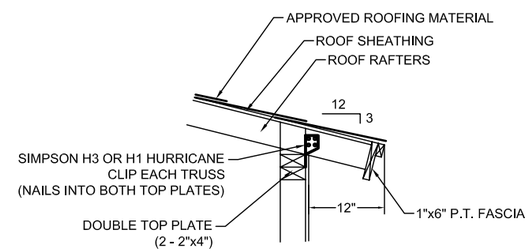

WALL TO ROOF DETAIL

SCALE: 1/2" = 1'-0"

THESE PLANS ARE IN COMPLIANCE WITH THE WIND LOAD PROVISIONS FOR 120 MPH OF THE PRESCRIPTIVE DESIGN OF THE WOOD FRAME CONSTRUCTION MANUAL (WFMC) 2001 EDITION.

DRAWING STATUS	
	DRAFT
	PERMIT
	BID
	ADDENDA
	CONSTRUCTION
	RECORD

NO.	DATE	REVISIONS	BY

City of Holly Hill

RESIDENTIAL WOOD FRAMED SHED

SHED FOUNDATION
ANCHORED WOOD FLOOR

DATE:	5/2/12	PROJECT NO.:	N/A
SCALE:	AS SHOWN	FILE NAME:	BUILDING SHED.dwg
DRAWN BY:	MC	SHEET:	4 of 6

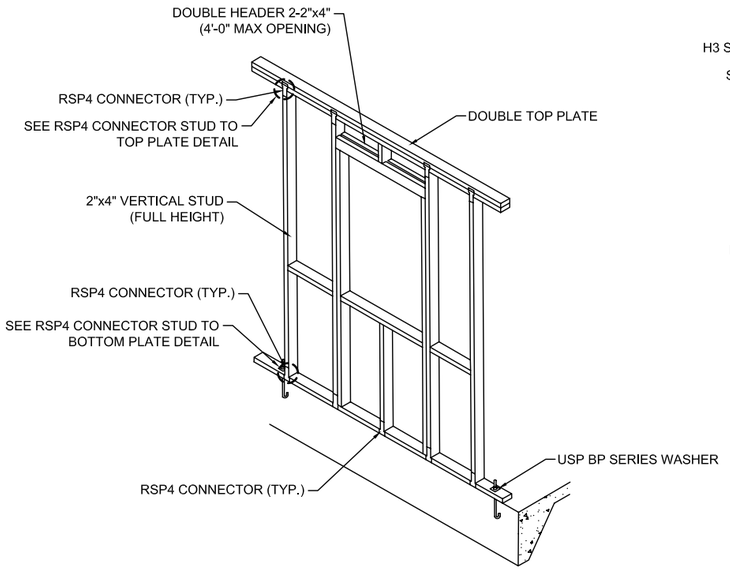

WINDOW FRAMING ON ENDWALL

SCALE: x/x" = 1'-0"

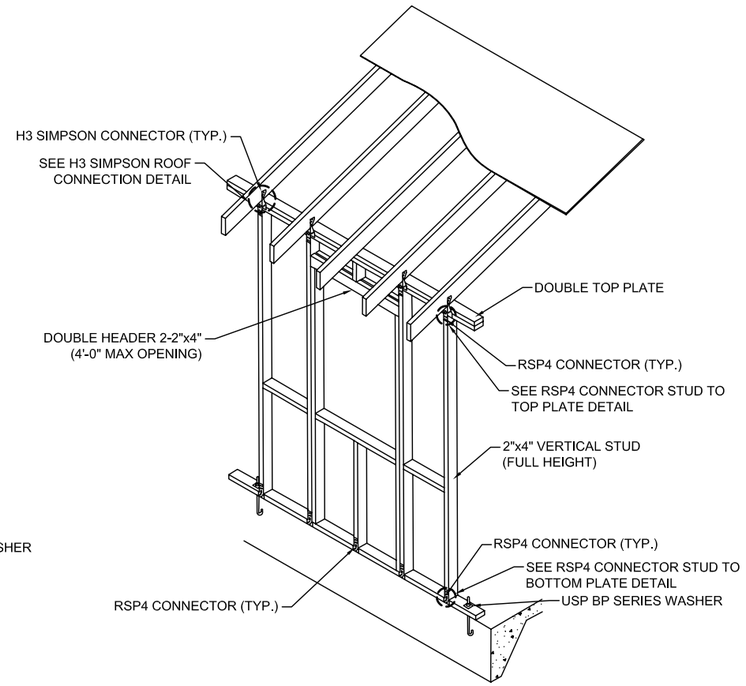

WINDOW FRAMING ON SIDEWALL

SCALE: x/x" = 1'-0"

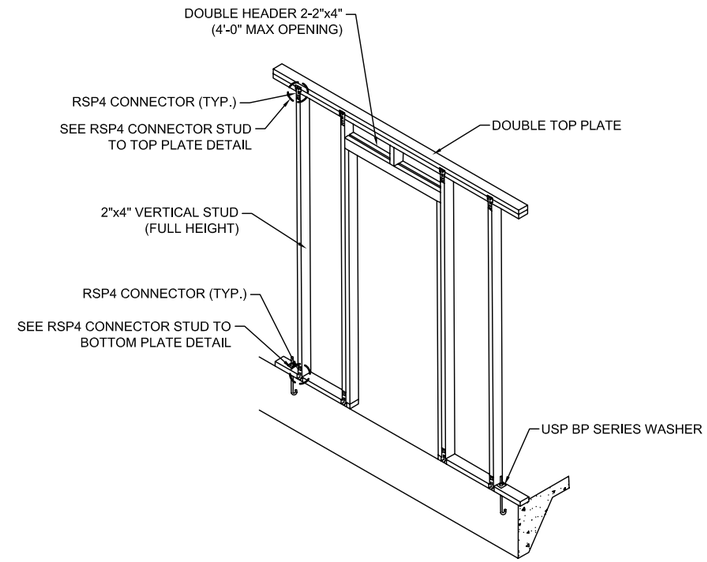

DOOR FRAMING

SCALE: x/x" = 1'-0"

H1 SIMPSON ROOF
CONNECTION DETAIL

SCALE: x/x" = 1'-0"

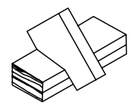

RAFTER NOTCH AT TOP PLATE DETAIL
(BIRD MOUTH CUT)

SCALE: N.T.S.

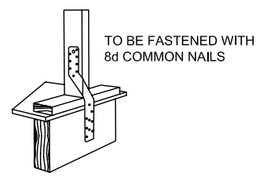

H6 SIMPSON CONNECTOR

SCALE: N.T.S.

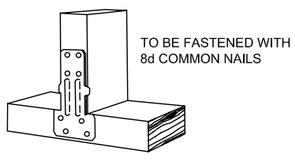

RSP4 CONNECTOR
STUD TO BOTTOM PLATE DETAIL

SCALE: N.T.S.

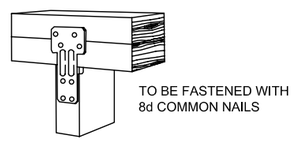

RSP4 CONNECTOR
STUD TO TOP PLATE DETAIL

SCALE: N.T.S.

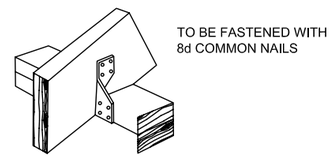

H3 SIMPSON ROOF
CONNECTION DETAIL

SCALE: N.T.S.

THESE PLANS ARE IN COMPLIANCE WITH THE WIND LOAD PROVISIONS FOR 120 MPH OF THE PRESCRIPTIVE DESIGN OF THE WOOD FRAME CONSTRUCTION MANUAL (WFMC) 2001 EDITION.

DRAWING STATUS	
	DRAFT
	PERMIT
	BID
	ADDENDA
	CONSTRUCTION
	RECORD

NO.	DATE	REVISIONS	BY

City of Holly Hill

RESIDENTIAL WOOD FRAMED SHED

DOOR & WINDOW FRAMING
& CONNECTOR DETAILS

DATE: 5/2/12	PROJECT NO.: N/A
SCALE: AS SHOWN	FILE NAME: BUILDING SHED.dwg
DRAWN BY: MC	SHEET: 5 of 6

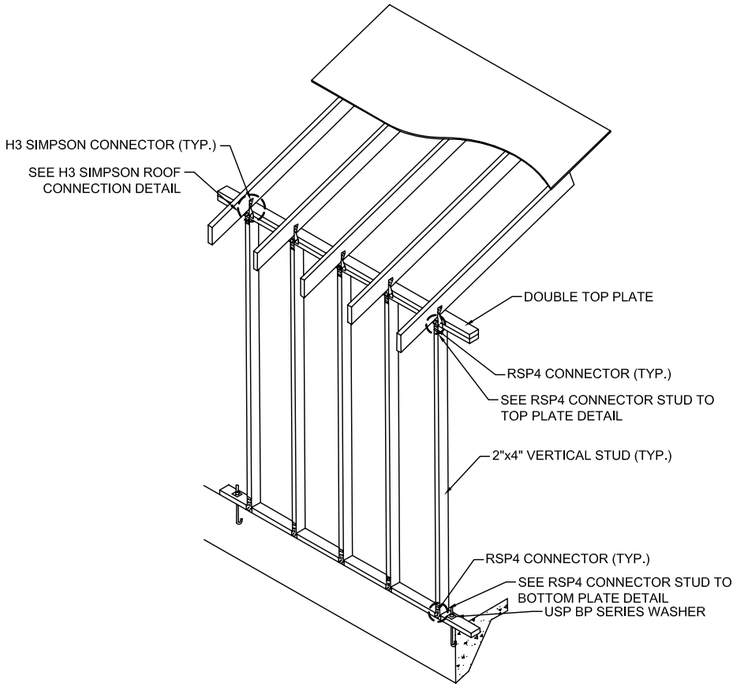

WALL FRAMING

SCALE: 1/4" = 1'-0"

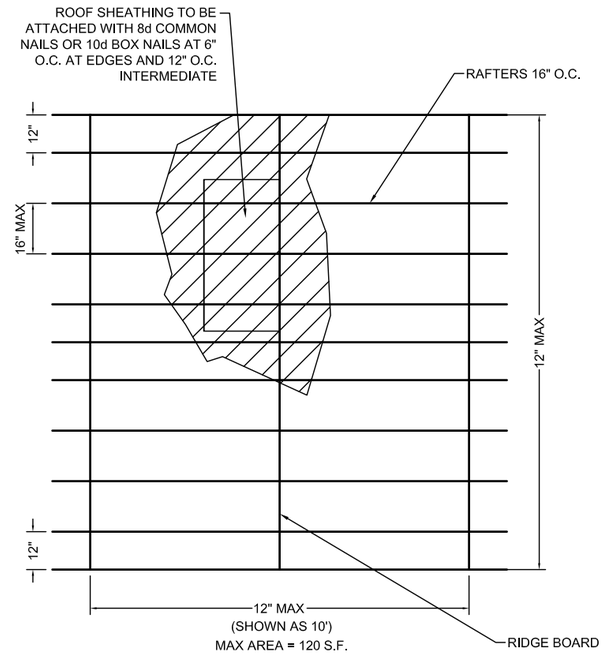

ROOF FRAMING PLAN

SCALE: 1/4" = 1'-0"

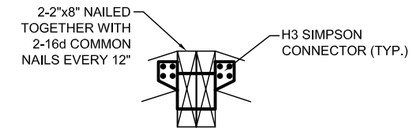

RIDGE BEAM DETAIL

SCALE: N.T.S.

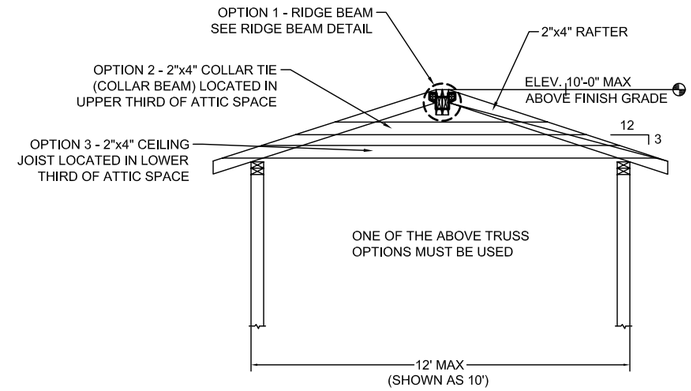

TRUSS DETAIL

SCALE: N.T.S.

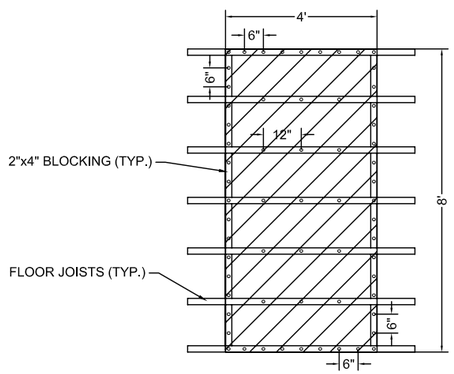

FLOOR PANEL NAILING PLAN

SCALE: 1/4" = 1'-0"

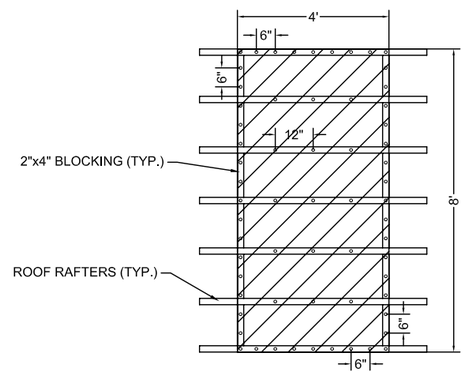

ROOF PANEL NAILING PLAN

SCALE: 1/4" = 1'-0"

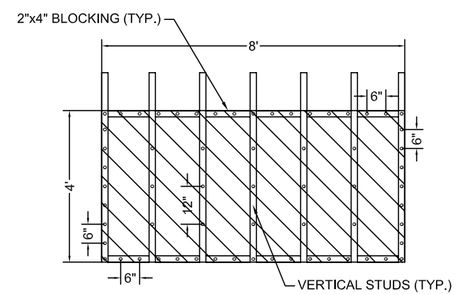

WALL PANEL NAILING PLAN

SCALE: 1/4" = 1'-0"

THESE PLANS ARE IN COMPLIANCE WITH THE WIND LOAD PROVISIONS FOR 120 MPH OF THE PRESCRIPTIVE DESIGN OF THE WOOD FRAME CONSTRUCTION MANUAL (WFMC) 2001 EDITION.

DRAWING STATUS	
	DRAFT
	PERMIT
	BID
	ADDENDA
	CONSTRUCTION
	RECORD

NO.	DATE	REVISIONS	BY

City of Holly Hill

RESIDENTIAL WOOD FRAMED SHED

WALL & ROOF FRAMING PLAN & NAILING PLAN

DATE:	5/2/12	PROJECT NO.: N/A	
SCALE:	AS SHOWN	FILE NAME: BUILDING SHED.dwg	
DRAWN BY:	MC	SHEET:	6 of 6